brother®

Home Sewing Machine

PARTS REFERENCE LIST

MODEL: NV1200

MECHANISMS & ELECTRONICS

CONFIDENTIAL

Copyright © 2010 Brother Industries, Ltd.
All rights reserved.

CONTENTS

(1) MAIN FRAME / COVER 2

(2) UPPER SHAFT / NEEDLE BAR / PRESSER FOOT UNIT ... 6

(3) FEED / SIDE FEED / THREAD CUTTING UNIT 8

(4) LOWER SHAFT / BOBIN WINDING MECHANISM 10

(5) NEEDLE THREADING MECHANISM 12

(6) ELECTRIC PARTS / POWER SUPPLY / MAIN MOTOR UNIT... 14

(7) EMBROIDERY UNIT 16

(8) ACCESSORY PARTS / USER MANUAL / PACKAGE..... 20

NEEDLE-PRESSER MODULE..... 24

FEED MODULE..... 28

THREAD CUTTER MODULE 30

Note on parts:
We keep performance parts for this sewing machine for at least 8 years after this model is discontinued.
Performance parts are the necessary parts to maintain the function of the sewing machine.

(1) MAIN FRAME / COVER

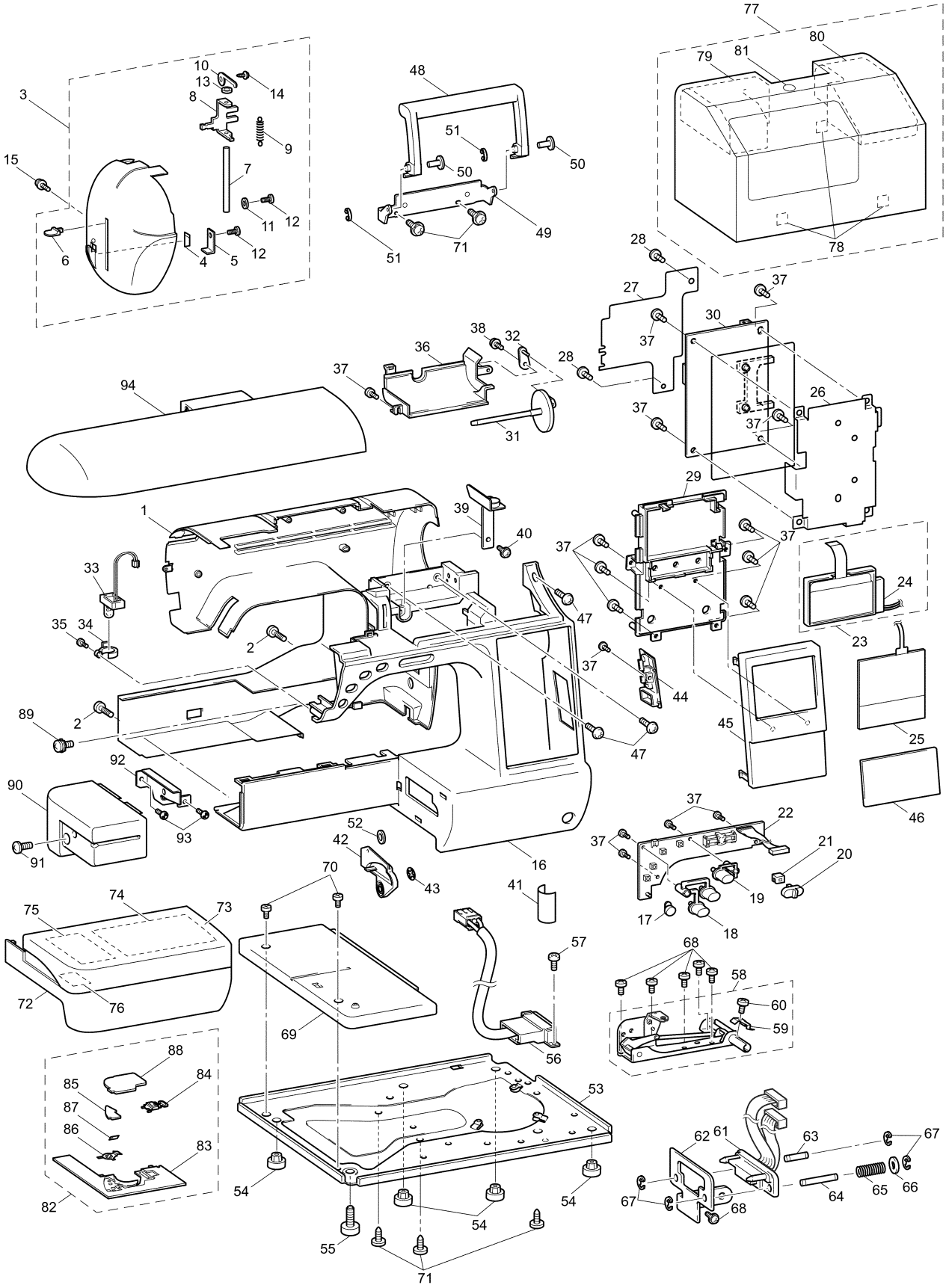

(1) MAIN FRAME / COVER

No.	CODE	NAME	REMARKS
1	XD0321151	REAR COVER ASSY	
2	060400816	SCREW, BIND M4 × 8	
3	XD0324151	FACE PLATE	1000011565
4	X80321021	NT LOWER THREAD CUTTER	060123
5	XC9682051	FACE PLATE CUTTER HOLDER	
6	XC9604051	NEEDLE THREAD LEVER KNOB	
7	XA5825051	NEEDLE THREAD LEVER SHAFT	
8	XC9683051	NEEDLE THREAD LEVER	
9	138260051	THREAD THROUGH LEVER SPRING	
10	XZ0406050	SHAFT PRESSER PLATE	
11	XE5212001	WASHER, PLAIN	1000011565
12	138433021	TAPTITE, PAN B M3 × 6	060123
13	XC0508020	RUBBER WASHER	060123
14	X59629021	TAPTITE, BIND B M3 × 10	060123
15	XC7568051	SCREW PAN (S/P WASHER) M4 × 14	
16	XD1253151	FRONT COVER	1000014022
17	XC9600052	SS-BUTTON	
18	XC9601051	REVERSE BUTTON	
19	XC9602051	THREAD CUT BUTTON	
20	XC9603051	SV KEYTOP	
21	XC2316150	SV JOINT PLATE	
22	XC2317151	PCB ASSY: SS-VR F2	
23	XD0830051	LCD SUPPLY ASSY	
24	XD0334051	BACK LIGHT PCB ASSY	
25	XD0338056	ASSY: TOUCH PANEL	
26	XD0340051	BOARD PLATE	
27	XD0331051	BOARD PLATE UPPER	
28	060300516	SCREW BIND M3X5	
29	XD0341051	MAIN PCB HOLDER	
30	XD1923251	MAIN PCB SUPPLY ASSY	1000012307
31	XA1786053	SPOOL PIN	
32	XC9690051	SPOOL PIN HOLDER ASSY	
33	XD0343051	PCB UNIT: LED LAMP-FR	
34	XC7081051	LAMP HOLDER SUPPORTER	
35	X57372051	TAPTITE, PAN B M2.6 × 8	
36	XC9591051	THREAD BOBBIN COVER	
37	136681021	TAPTITE, BIND B M3 × 8	060123
38	087311015	TAPTITE, CUP B M3 × 10	
39	XC9693451	BOBBIN WINDER GUIDE ASSY	
40	XA8390021	SCREW	060123
41	XZ0143050	SSVR INSULATION SHEET	
42	XD0345251	CONNECT COVER	
43	138384021	RETAINING RING, CS5	060123
44	XD0893051	CARD COVER	

No.	CODE	NAME	REMARKS
45	XD0347151	INDICATION PLATE	
46	XD0349154	PANEL PLATE	
47	085411416	TAPTITE, BIND B M4 × 14	
48	XC2348151	HANDLE	1000019381
49	XC9696051	HANDLE HOLDER	
50	XC2350051	HANDLE SHAFT	
51	048040343	RETAINING RING, E4	1000001452
52	137713020	POLYESTER SLIDER	1000014067
53	XC6818151	BASE PLATE	
54	XA1805021	BASE RUBBER A	060123
55	XE1973001	ADJUSTING SCREW ASSY	1000000187
56	XC4417051	INLET ASSY: F1D-EU (EU, CHL)	
	XE0358001	INLET ASSY US2 (U.S.A., CAN)	1000004096
57	060400616	SCREW BIND M4X6	
58	XC4447151	KNEE LIFTER ASSEMBLY	
59	XA6215251	SPRING, PLATE	
60	060260316	SCREW BIND M2.6X3	
61	XD0351051	LEAD WIRE ASSY MAIN BODY FCOMB	
62	XD0890051	CONNECTOR HOLDER F-EU	
63	XD0353051	ES PIN F-A	
64	XD0945051	ES PIN F-B	
65	XD0967051	SPRING, COMPRESSION	
66	XC2514021	FEED BAR SPACER	
67	048020343	RETAINING RING E2	1000001452
68	062400612	SCREW PAN M4X6	
69	XC9589051	BASE PLATE COVER	
70	060300516	SCREW, BIND M3 × 5	
71	X57908021	TAPTITE, BIND S M4X10	060123
72	XC9606251	ACCESSORY TABLE	
73	XD0829051	ACC TABLE COVER SUPPLY ASSY	
74	XD0528050	SPONGE A	
75	XD0609050	SPONGE B	
76	XD0610151	Q FOOT STICKER	
77	XC9701052	CASE ASSEMBLY	
78	125440020	CASE FELT	060123
79	XC9702050	HEAD SUPPORT SF-L	
80	XC9703050	HEAD SUPPORT SF-R	
81	XZ0161051	BLIND PLATE	
82	XD0354251	NEEDLE PLATE B ASSY	1000006037
83	XD0355251	NEEDLE PLATE B	1000006037
84	XC2366152	SLIDE BUTTON	
85	XD1666052	CUTTER COVER	
86	XD1461051	NEEDLE PLATE COVER SPRING	
87	X80321021	NT LOWER THREAD CUTTER	060143

(1) MAIN FRAME / COVER

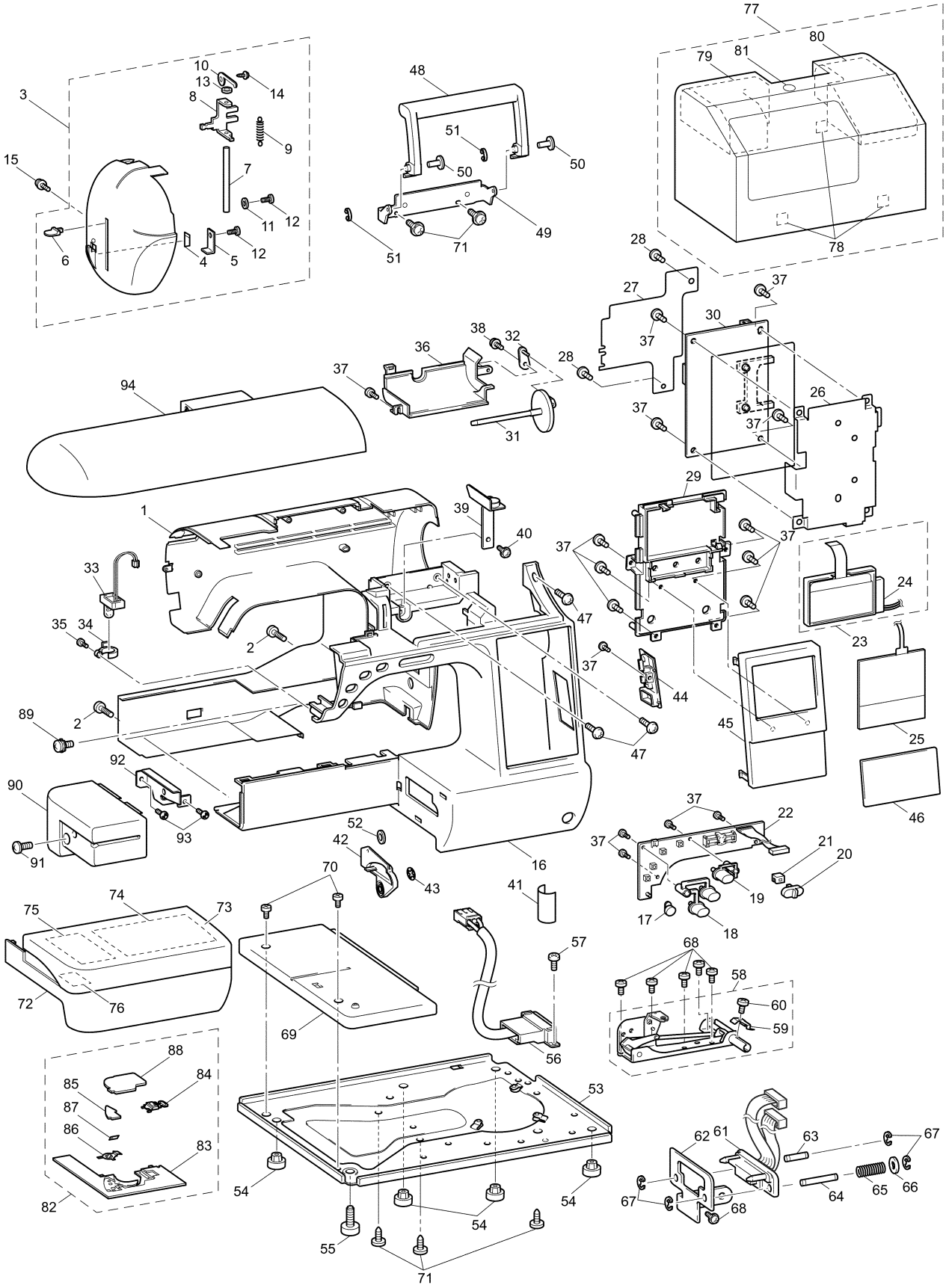

(1) MAIN FRAME / COVER

No.	CODE	NAME	REMARKS
88	XD1645021	NEEDLE PLATE COVER SUPPLY ASSY	1000001728
89	XC4433051	SCREW, PAN (T WASHER) M3 × 6	
90	XC9588251	FREE ARM COVER	
91	XC7566051	SCREW, PAN (S/P WASHER) M4X8	
92	XC9746151	FREE ARM PLATE	
93	060400616	SCREW BIND M4X6	
94	XD0356052	TOP COVER (EU)	
	XD0356051	TOP COVER (U.S.A., CAN, CHL)	ADD

(2) UPPER SHAFT / NEEDLE BAR / PRESSER FOOT UNIT

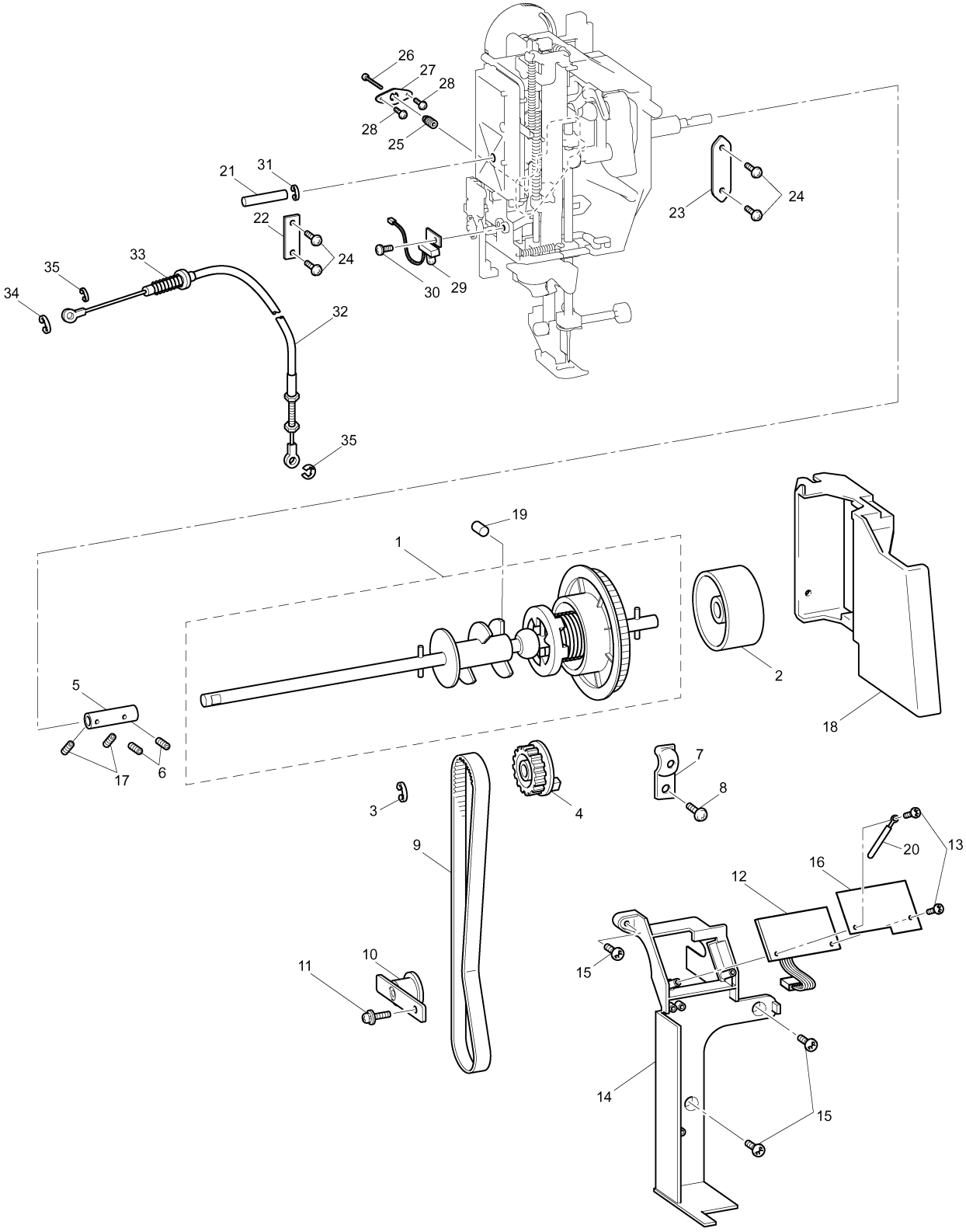

(2) UPPER SHAFT / NEEDLE BAR / PRESSER FOOT UNIT

No.	CODE	NAME	REMARKS
		UPPER SHAFT MECHANISM	
1	XC3246151	UPPER SHAFT ASSY	
2	XC2375051	PULLEY	
3	048060343	RETAINING RING, E6	1000001452
4	XC2380050	UPPER SHAFT PULLEY	
5	XC2383021	FIXED JOINT	060097
6	012500532	SET SCREW, SOCKET (FT) M5 × 5	
7	132421021	BUSHING PRESSER	060097
8	X57908021	TAPTITE, BIND S M4 × 10	060097
9	XC2384051	TIMING BELT 420-5GT-6	
10	XC2385051	TENSION PULLEY ASSEMBLY	
11	138172021	SCREW, PAN (S/P WASHER) M4 × 10	060097
12	XD0362051	NP PCB ASSY FCOM	
13	X59629021	TAPTITE, BIND B M3 × 10	060097
14	XC2390251	PCB HOLDER	
15	060400816	SCREW, BIND M4 × 8	
16	XC3028051	INSULATION SHEET	
17	014400432	SET SCREW, SOCKET (CP) M4 × 4	
18	XD0587051	BELT GUARD	
19	XC3183051	FELT	
20	137947001	CLIP	
		NEEDLE BAR / PRESSER FOOT UNIT	
21	XC2503051	SHAFT	
22	XC2297051	PRESSER PLATE A	
23	XC2298051	PRESSER PLATE B	
24	X57908021	TAPTITE, BIND S M4 × 10	060094
25	XC2504050	ADJUSTING SCREW	
26	XZ0380051	SCREW, PAN (WASHER) M3 × 18	
27	XC2505050	PLATE SPRING	
28	060400516	SCREW, BIND M4 × 5	
29	XD0365051	PCB UNIT: LED LAMP-FL	
30	XZ0149021	TAPTITE, PAN B 4 × 12	060094
31	048050343	RETAINING RING, E5	1000001452
32	XC4473001	WIRE ASSY	
33	XA6198001	SPRING, COMPRESSION	
34	048040343	RETAINING RING E4	1000001452
35	048030343	RETAINING RING E3	1000001452

(3) FEED / SIDE FEED / THREAD CUTTING UNIT

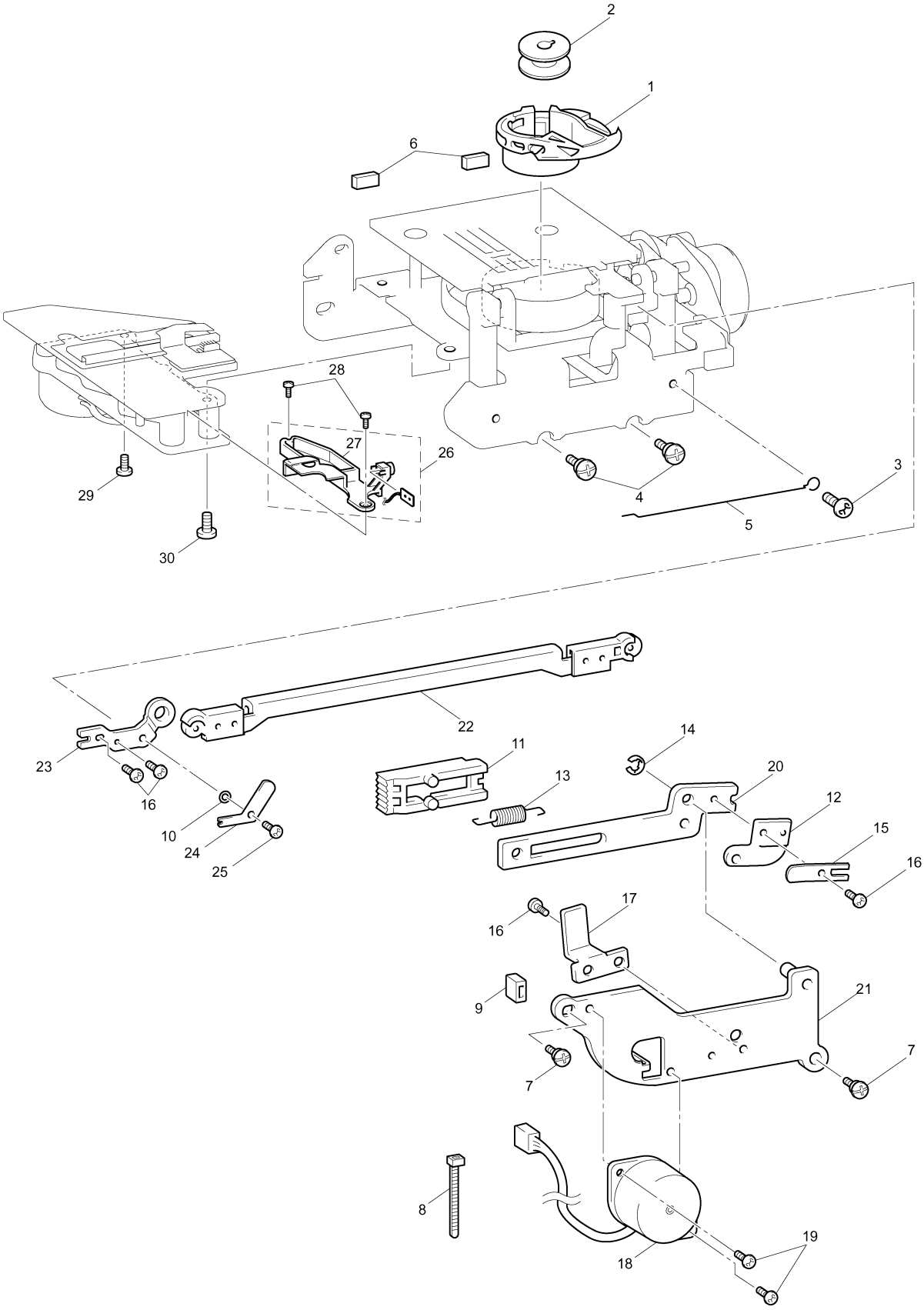

(3) FEED / SIDE FEED / THREAD CUTTING UNIT

No.	CODE	NAME	REMARKS
		FEED UNIT	
1	XC3153321	INNER ROTARY HOOK ASSY	1000017150
2	X52800120	BOBBIN	060148
3	060300416	SCREW, BIND M3 × 4	
4	XC3096051	SCREW M4	
5	XZ0190051	LEADLINE GUIDE	
6	XZ0160051	SHEET	
		SIDE FEED MECHANISM	
7	X57908021	TAPTITE, BIND S M4 × 10	060143
~~8~~	~~X53169020~~	~~BAND~~	1000006849
9	XA2189050	RUBBER	
10	XA2401050	WASHER	
11	XA9506051	SIDE FEED GEAR	
12	XA9507050	SIDE FEED WASHER	
13	XA9508051	SPRING, EXTENSION	
14	048030343	RETAINING RING, E3	1000001452
15	XA9514051	SPRING, PLATE A	
16	060300616	SCREW, BIND M3 × 6	
17	XC0411051	S STOPPER	
18	XC5340021	MOTOR, PULSE: S SMJ35-4840-E	
19	060300416	SCREW, BIND M3 × 4	
20	XC6258051	SIDE FEED PLATE	
21	XC8418051	SPM HOLDER ASSY	
22	XC6259051	SIDE FEED ARM ASSY	
23	XC6263051	SIDE FEED ADJUST PLATE	
24	XC6264051	SPRING, PLATE B	
25	060300516	SCREW, BIND M3 × 5	
		THREAD CUTTING UNIT	
26	XC8329151	PHOTO TRANSISTOR ASSY	
27	XC9199051	SENSOR HOLDER	
28	0A4300605	SCREW, PAN (S/P WASHER) M3 x 6	
29	060400516	SCREW BIND M4X5	
30	060300516	SCREW BIND M3X5	
~~31~~	~~X53169020~~	~~BAND~~	1000006849

(4) LOWER SHAFT / BOBIN WINDING MECHANISM

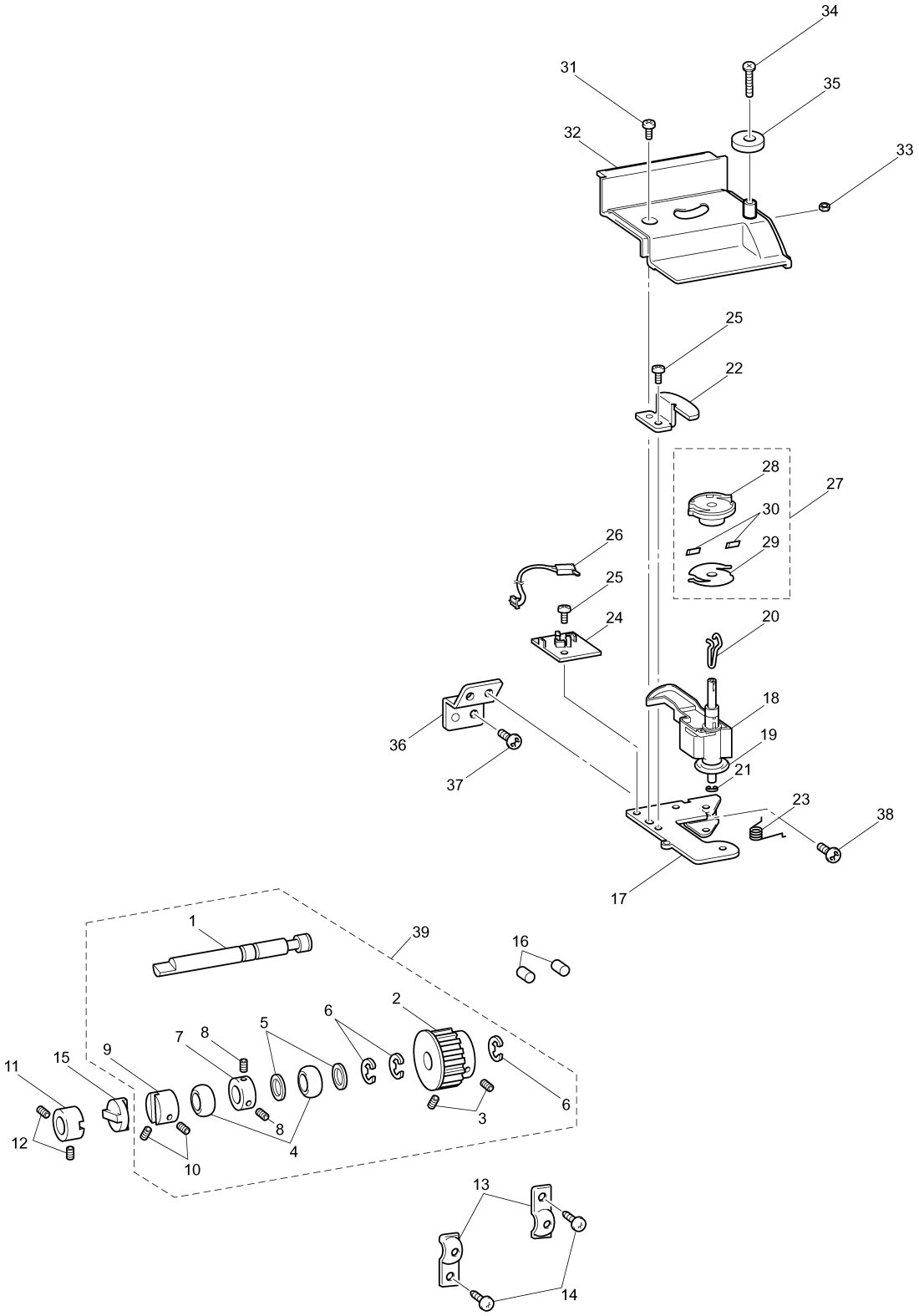

(4) LOWER SHAFT / BOBIN WINDING MECHANISM

No.	CODE	NAME	REMARKS
		LOWER SHAFT MECHANISM	
1	XC2600050	LOWER SHAFT A	
2	XC4943021	TIMING PULLEY D	1000000444
3	014500532	SET SCREW, SOCKET (CP) M5 × 5	1000000444
4	X52664050	LOWER SHAFT BUSHING	
5	X51383050	WASHER, THRUST	
6	048060343	RETAINING RING, E6	1000001452
7	137768151	SET SCREW COLLAR	
8	014400432	SET SCREW, SOCKET (CP) M4 × 4	
9	XC2602021	JOINT	060101
10	012500532	SET SCREW, SOCKET (FT) M5 × 5	
11	XC2602021	JOINT	060101
12	012500532	SET SCREW, SOCKET (FT) M5 × 5	
13	132421021	BUSHING PRESSER	060101
14	X57908021	TAPTITE, BIND S M4 × 10	060101
15	XC2603050	DISK	
16	XC3183051	FELT	
		BOBIN WINDING MECHANISM	
17	XC2605051	BOBBIN WINDER ASSEMBLY HOLDER	
18	XC2606251	BW SHAFT HOLDER ASSEMBLY	
19	X55238051	RUBBER RING	
20	XZ5039001	BOBBIN WINDER SHAFT SPRING	1000007062
21	048050343	RETAINING RING, E5	
22	XA2862051	BOBBIN WINDER SHAFT STOPPER	
23	X59939051	BOBBIN WINDER SPRING	
24	XC2614051	SW ADJUST PLATE	
25	060300616	SCREW, BIND M3 × 6	
26	XC2612051	SW ASSY: BW-F	
27	XC4672051	BOBBIN BASE ASSY	
28	XC2616051	BOBBIN BASE	
29	XA5877051	BOBBIN THREAD CUTTER HOLDER	
30	X80321021	NT LOWER THREAD CUTTER	060143
31	XA8390051	SCREW	
32	XC9590051	BOBBIN WINDER COVER	
33	021300205	NUT, 1 M3	
34	0A4302506	SCREW PAN (S/P WASHER) M3X25	
35	XC4517151	BOBBIN PRESSER	1000018473
36	XC2615051	BW HOLDER SUPPORTER	
37	X57908021	TAPTITE, BIND S M4 × 10	060115
38	060400816	SCREW, BIND M4 × 8	
39	XC2599021	LOWER SHAFT A ASSY	1000001116

(5) NEEDLE THREADING MECHANISM

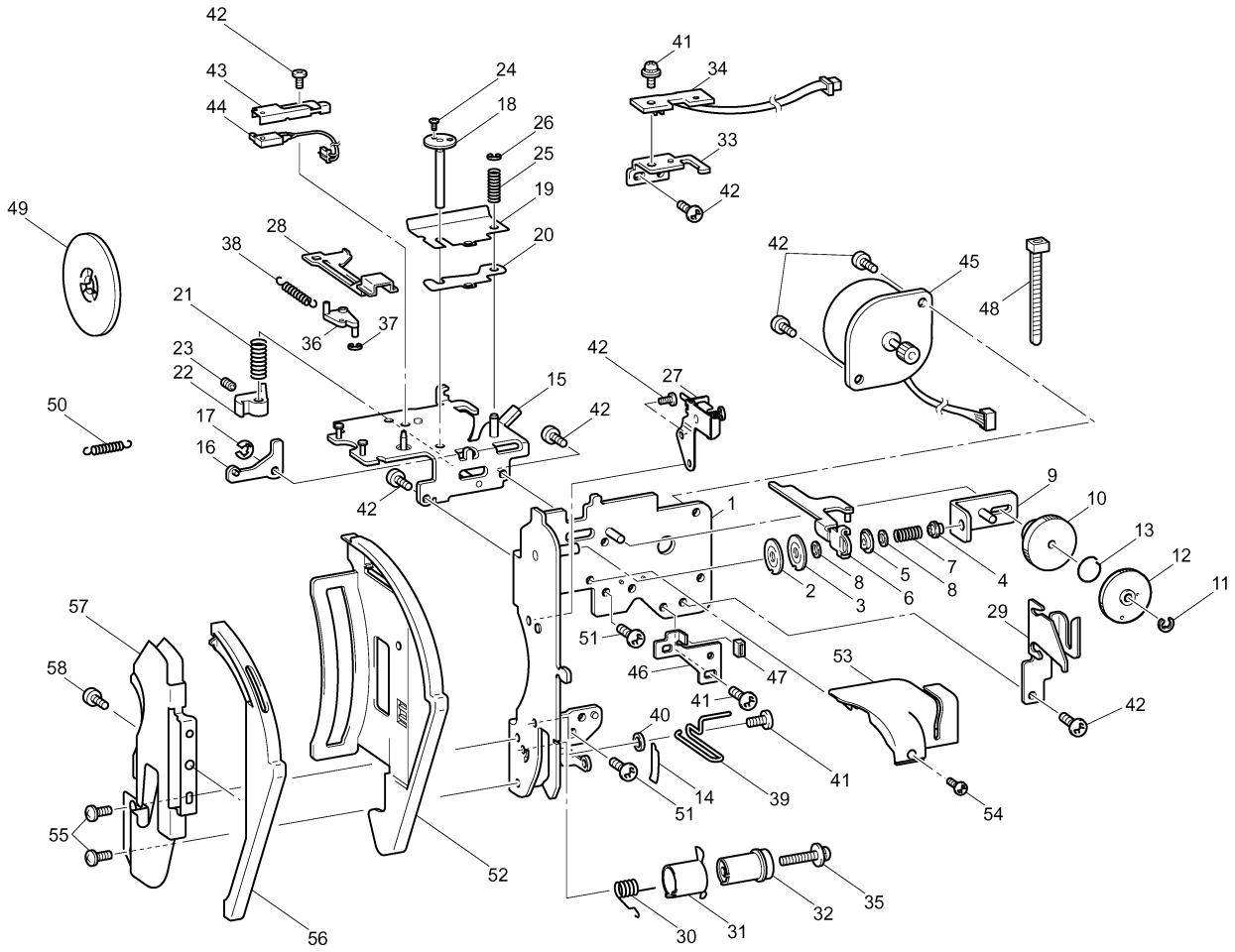

(5) NEEDLE THREADING MECHANISM

No.	CODE	NAME	REMARKS
1	XC2624351	THREAD GUARD ASSEMBLY	
2	XA0083121	TENSION DISC A	1000006407
3	XC2626121	TENSION DISC B	1000006407
4	XC3437051	TENSION ADJUSTING SCREW	
5	XA1388021	TENSION DISC WASHER	060149
6	XC2627051	TENSION RELEASE PLATE ASSY	
7	XA9900051	THREAD TENSIONSPRING	
8	XD0573021	WASHER	060149
9	XA9562051	TENSION PLATE ASSY	
10	XZ0171051	THREAD TENSIONCAM	
11	048030343	RETAINING RING, E3	1000001452
12	XZ0170051	THREAD TENSION GEAR COVER	
13	X56323021	SPRING	060149
14	XA9935050	SPRING TAPE	
15	XC2635151	TENSION RELEASE HOLDER ASSY	
16	XA9571051	TENSION RELEASERLINK	
17	048030343	RETAINING RING, E3	1000001452
18	XC2638151	TENSION PRESSURE ASSY	
19	XA9575051	TENSION PLATE	
20	XA9576051	SPACER	
21	XA9577051	SPRING	
22	XC2640051	TENSION RELEASE CAM	
23	012300432	SET SCREW, SOCKET (FT) M3 × 4	
24	X57363051	POWER LOCK 2 × 3	
25	X57605051	SPRING	
26	048020343	RETAINING RING, E2	1000001452
27	XC2644051	PLATE ASSEMBLY	
28	XC9740051	THREAD GUIDE SHUTTER	
29	XC2749051	THREAD GUIDE	
30	XC6957121	THREAD TAKE UP SPRING	1000005353
31	XE5731001	THREAD CUTTING SHUTTER	1000010311
32	XD0377151	THREAD CATCHING SPRING CASE FE	1000003352
33	XD0379051	THREAD SENSOR HOLDER FE	
34	XD0380051	UPTHREAD PCB ASSY FCOM	
35	0A4302006	SCREW PAN (S/P WASHER) M3X20	
36	XC2649050	THREAD GUIDE SHUTTER LINK	
37	048030343	RETAINING RING, E3	1000001452
38	XC2650051	SPRING	
39	XD0383050	THREAD GUIDE WIRE FE	
40	XA9996051	WASHER, PLAIN	
41	XC7564021	SCREW, PAN (S/P WASHER) M3X6	060149
42	060300416	SCREW, BIND M3 × 4	
43	XC2641051	PRESSER SWITCH HOLDER	
44	XC2642051	SW ASSY: PF-F	
45	XC4407021	MOTOR, PULSE: AT SMJ35-4840-D	
46	XC4484051	INITIAL ADJUSTING PLATE	
47	XC3253051	RUBBER	
48	X53169020	BAND	060143
49	XE1372001	SPOOL PRESSER C	060144
50	XA9787051	SPRING	
51	085411015	TAPTITE, BIND B M4 × 10	
52	XD0384151	THREAD GUIDE COVER	
53	XD0386051	FRONT THREAD GUARD COVER	
54	060300416	SCREW, BIND M3 × 4	
55	XC7564021	SCREW, PAN (S/P WASHER) M3X6	060149
56	XD0389051	THREAD GUIDE COVER	
57	XC9745151	THREAD GUIDE	
58	X59629021	TAPTITE, BIND B M3X10	060149

(6) ELECTRIC PARTS / POWER SUPPLY / MAIN MOTOR UNIT

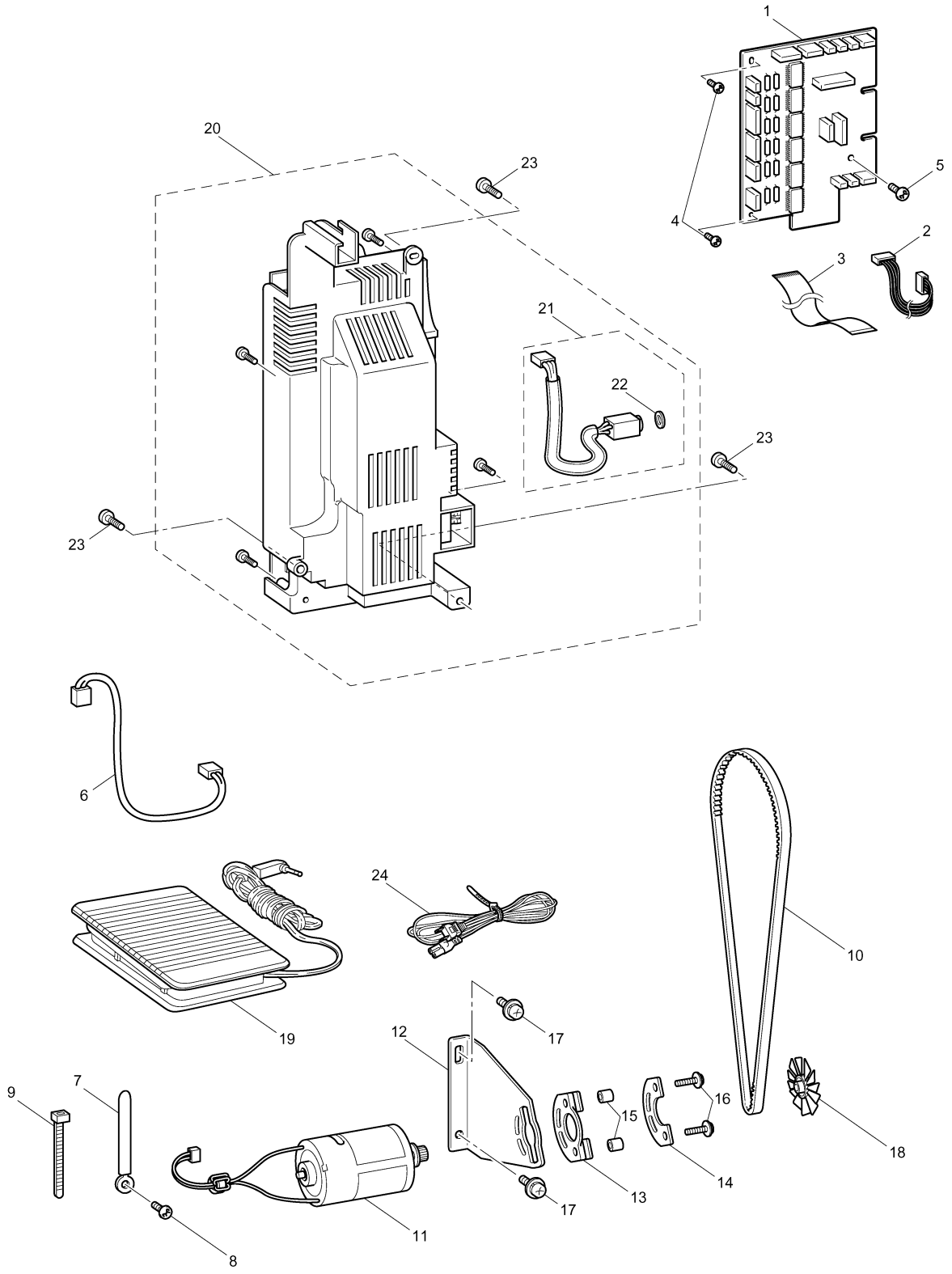

(6) ELECTRIC PARTS / POWER SUPPLY / MAIN MOTOR UNIT

No.	CODE	NAME	REMARKS
		ELECTRIC PARTS	
1	XD1924051	MOTOR PCB SUPPLY ASSY	1000012307
2	XD0394051	LEAD WIRE ASSY POWER	
3	XD0395051	FFC: UL2896SFBNCD-P0.5-L1-50	
4	136681021	TAPTITE, BIND B M3X8	060119
5	060400816	SCREW, BIND M4 × 8	
6	XC2672051	LEAD ASSY: BH CABLE-F	
7	XA0286021	WIRE CLIP	060119
8	X57908021	TAPTITE, BIND S M4 × 10	060119
9	X53169020	BAND	060119
		MAIN MOTOR UNIT	
10	XC2685051	T BELT494-2GT-6	
11	XC2687051	ASSY: MAIN MOTOR-F (EU, CHL)	
	XE0101001	MAIN MOTOR FV ASSY (U.S.A., CAN)	ADD
12	XC2690051	MOTOR HOLDER	
13	XA9649050	FENDER RUBBER	
14	XA9650051	MOTOR SPACER PRESSER	
15	XC3027051	SPACER 4 × 6	
16	XC7568051	SCREW, PAN (S/P WASHER) M4 × 14	
17	XA8474021	UPSET 4 × 12 DB	060117
18	XA9652150	MOTOR FAN	
19	XD0501021	FOOT CONTROLLER: FC-322-LF-EU (IRE, GER, U.K., FRA, ITA, NEU, EEU)	060117
	XC8816021	FOOT CONTROLLER: FC-322-81-LF (SIN, AUS, U.S.A., CAN, CHL)	060117
		POWER SUPPLY UNIT	
20	XD1235151	POWER SUPPLY UNIT F230 (EU, CHL)	1000000807
	XE0385101	POWER SUPPLY UNIT F120 FCC (US)	1000000807
21	XC4488051	FC JACK-F SUPPLY ASSY (EU)	
	XE1345001	FC JACK FCC SUPPLY ASSY (US)	060134
22	XD1973021	NUT F	060160
23	XC7568051	SCREW, PAN (S/P WASHER) M4X14	
24	X59354121	POWER SUPPLY CORD –BS (IRE, U.K.)	060116
	XA0070121	POWER SUPPLY CORD (GER, FRA, ITA, SIN, NEU, EEU, CHL)	060116
	XC9548021	POWER SUPPLY CORD: SAA-LF (AUS)	060116
	XC6052021	POWER SUPPLY CORD: UL CSA-LF (U.S.A., CAN)	1000006796
	XA5820021	MAIN POWER CODE (CHINA)	ADD

(7) EMBROIDERY UNIT

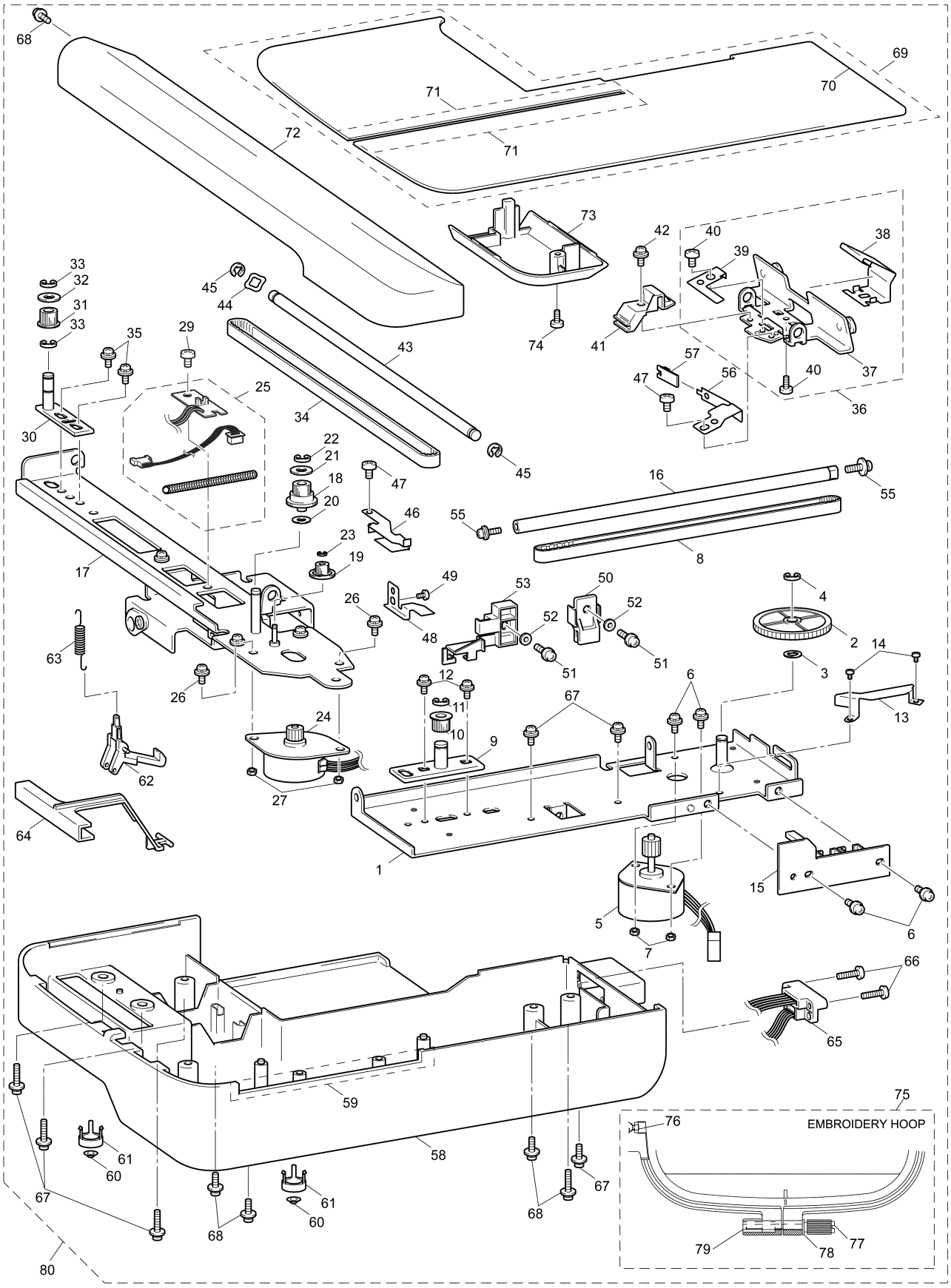

(7) EMBROIDERY UNIT

No.	CODE	NAME	REMARKS
1	XD0413051	MAIN FRAME SUB ASSY	
2	XD1350050	X DRIVING GEAR PULLEY	
3	XE2199001	WASHER SPRING	1000001046
4	048040343	RETAINING RING E4	1000001452
5	XD0415151	X PULSE MOTOR SMJ40-4888-B	
6	XA8390021	SCREW, PAN (S/P WASHER) M3X7	060150
7	021300205	NUT 2 M3	
8	XA2123051	TIMING BELT 62S2M494	
9	XD0418051	X TENSION PULLEY ASSY	
10	XA2127050	TENSION PULLEY	
11	048040343	RETAINING RING E4	1000001452
12	XC7566051	SCREW, PAN (S/P WASHER) M4X8	
13	XD0421050	OIL GUARD PLATE	
14	060300416	SCREW BIND M3X4	
15	XD0422051	EMB RELAY PCB ASSY	
16	XA2128051	X GUIDE SHAFT	
17	XD0426151	X CARRIAGE ASSY	
18	XD1351050	Y DRIVING GEAR PULLEY	
19	XD1161050	IDLE GEAR	
20	XE2199001	WASHER SPRING	1000001046
21	025060235	WASHER PLAIN M 6	
22	048040343	RETAINING RING E4	1000001452
23	048030343	RETAINING RING E3	1000001452
24	XD0432151	Y PULSE MOTOR SMJ35-4823-F	
25	XE3234001	LEAD WIRE SUPPLY ASSY: SLEEVE	1000004535
26	XA8390021	SCREW, PAN (S/P WASHER) M3X7	060150
27	021300205	NUT 2 M3	
~~28~~	~~XD0436051~~	~~Y SENSOR PCB ASSY~~	1000013932
29	060300416	SCREW BIND M3X4	
30	XD0438051	Y TENSION PULLEY ASSY	
31	XA2127050	TENSION PULLEY	
32	025060235	WASHER PLAIN M 6	
33	048040343	RETAINING RING E4	1000001452
34	XC8041051	TIMING BELT 40S2M530	
35	XC7566051	SCREW, PAN (S/P WASHER) M4X8	
36	XD0441151	Y CARRIAGE ASSY	1000017347
37	XD0442051	Y CARRIAGE PLATE SUB ASSY	
38	XD0444151	HOOP FIXED SPRING	1000017347
39	XD0445050	Y INITIAL SHUTTER	
40	060300416	SCREW BIND M3X4	
41	XA4710250	Y SLIDER	
42	XA8390021	SCREW, PAN (S/P WASHER) M3X7	060150
43	XA2139051	Y GUIDE SHAFT	
44	103810022	WASHER, WAVE SPRING	060150

No.	CODE	NAME	REMARKS
45	048040343	RETAINING RING E4	1000001452
46	XE0391001	CORD GUIDE ASSY	060053
47	060300416	SCREW BIND M3X4	
48	XD0447050	X INITIAL SHUTTER	
49	060400616	SCREW BIND M4X6	
50	XA2144350	X BELT PRESSER	
51	XC7567051	SCREW, PAN (S/P WASHER) M4X12	
52	027040226	WASHER EX TOOTH 4	1000000560
53	XD0448150	X SLIDER	
~~54~~	~~XD1814051~~	~~NYLON SLEEVE~~	1000013932
55	XC7566051	SCREW, PAN (S/P WASHER) M4X8	
56	XD0768051	Y GUIDE SHAFT PRESSER PLATE	
57	XD0769050	Y GUIDE SHAFT PRESSER	
58	XD0452051	ES BASE COVER	
59	XD0453051	GROOVE COVER	
60	X59853020	RUBBER CUSHION	060150
61	XC8094051	RUBBER CUSHION COVER	
62	XD0454051	LOCK FINGER	
63	XC8096051	SPRING	
64	XD0455051	LOCK RELEASE LEVER	
65	XD0456051	LEAD WIRE ASSY EMB UNIT FCOMB	
66	085301616	TAPTITE BIND P M3X16	060075
67	087411416	TAPTITE CUP B M4X14	
68	XC7566051	SCREW, PAN(S/P WASHER)M4X8	
69	XD0457051	ES MAIN COVER ASSY	
70	XD0458051	ES MAIN COVER	
71	XD0453051	GROOVE COVER	
72	XD0461051	X CARRIAGE COVER	
73	XD0463051	YPM COVER	
74	085301017	TAPTITE BIND P M3X10	
75	XE4586001	EF26 985 EMBROIDERY FRAME LARG	1000010621
76	021300106	NUT 1 M3	
77	XE4590001	THUMB SCREW	1000012264
78	X59422001	WASHER	
79	XA6982001	NUT	
	XD0466051	ES CARTON	
	XD0468150	ES POLYSTYRENE FOAM T	
	XD0469050	ES POLYSTYRENE FOAM U	
	X61231021	BAG 400X500H	1000013217
	XC2208001	BAG 240X330H	1000012991
80	XD1234251	EMBROIDERY PACKING ASSY (OTHER)	1000008670
	XE0550201	EMBROIDERY PACKING ASSY (U.S.A.)	1000008670
	XE5790001	EMBROIDERY PACKING ASSY (NV1200: CHL)	1000010470

(7) EMBROIDERY UNIT

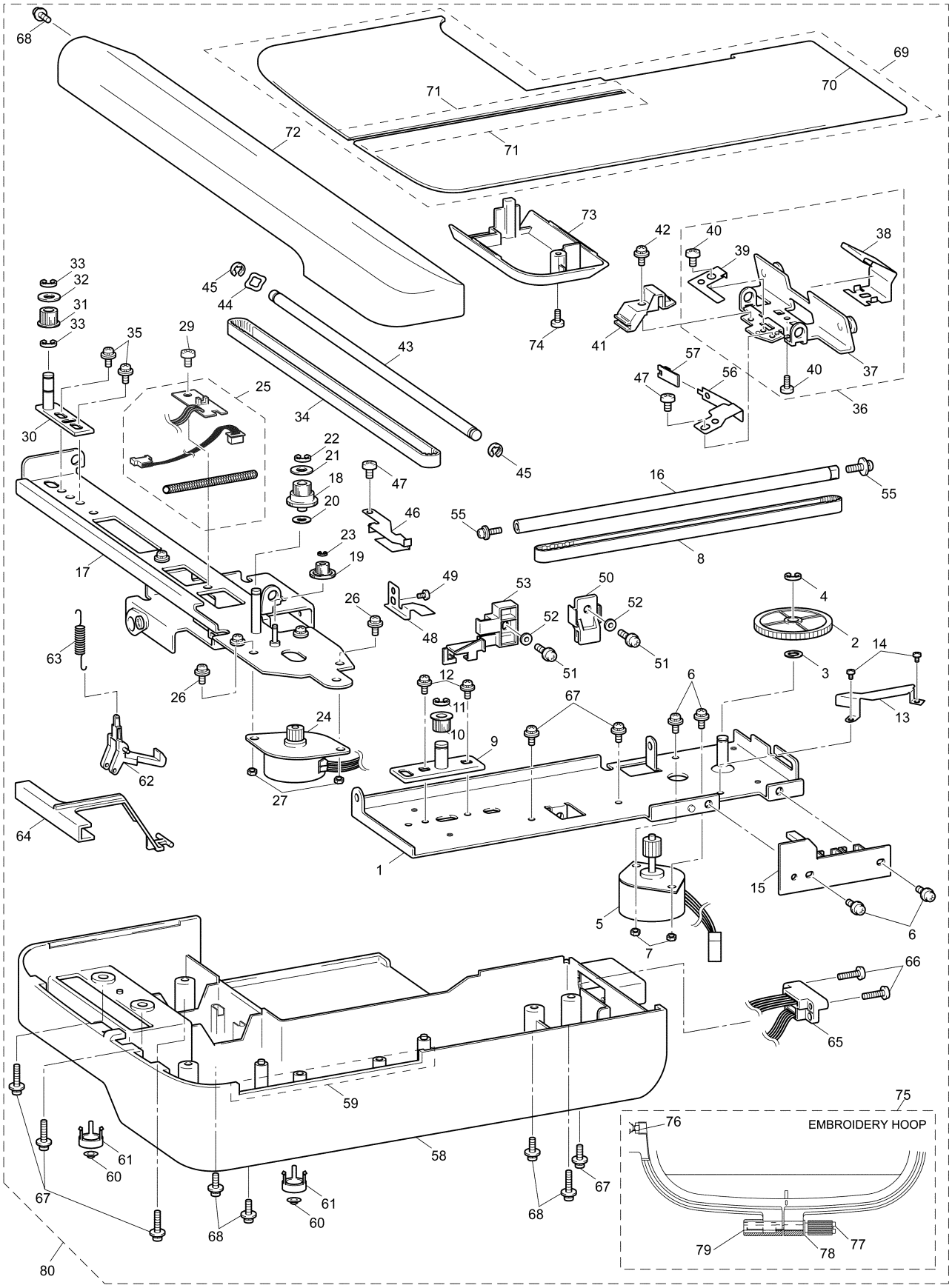

(7) EMBROIDERY UNIT

No.	CODE	NAME	REMARKS
	XA5918051	BAG 140X440	1000008545
	XA2174101	EF24 985 EMBROIDERY FRAME S (NV1200: CHL)	1000010470
	XD0649051	EMBROIDERY SHEET S ASSY F (NV1200: CHL)	1000010470

(8) ACCESSORY PARTS / USER MANUAL / PACKAGE

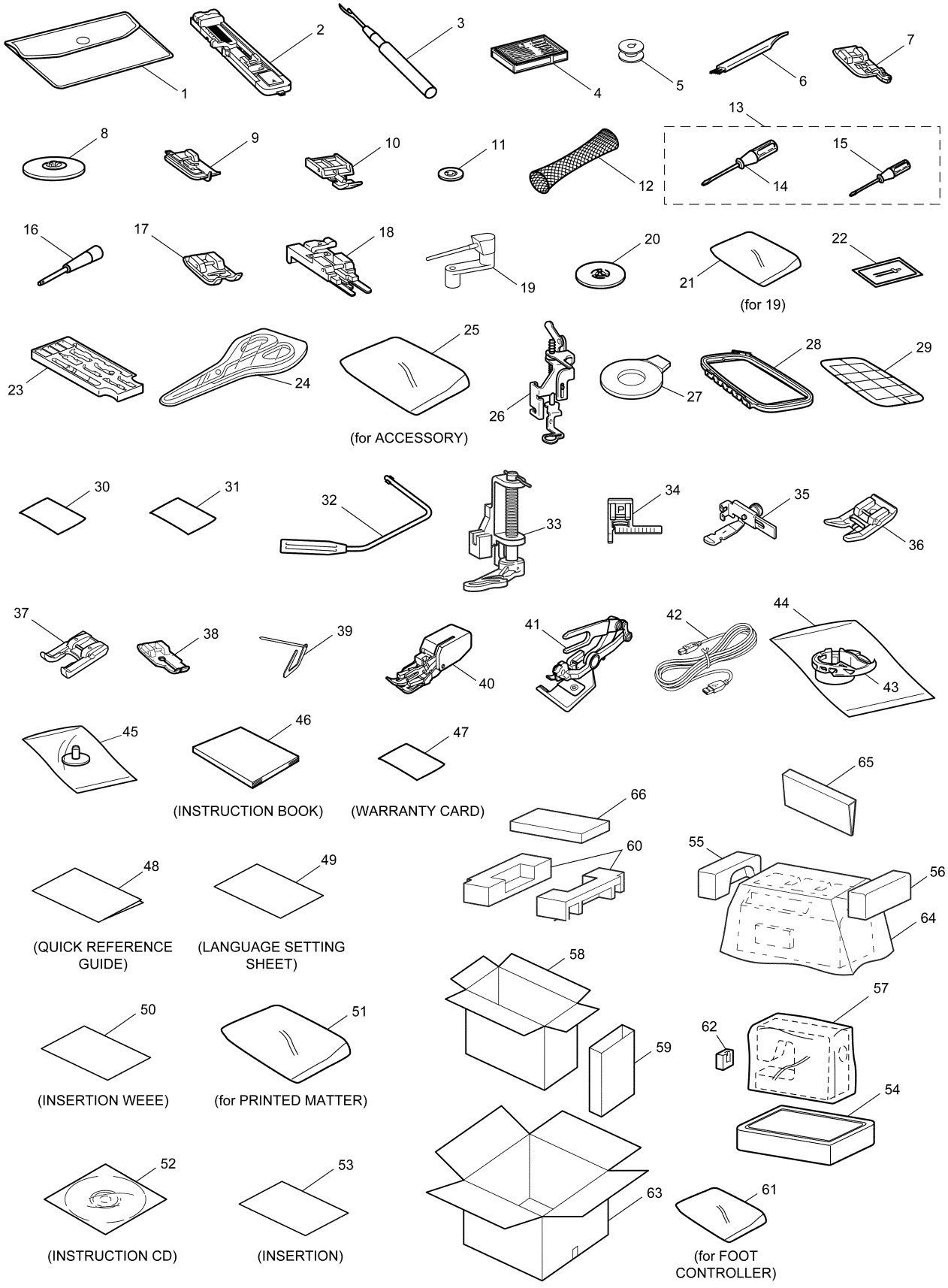

(8) ACCESSORY PARTS / USER MANUAL / PACKAGE

No.	CODE	NAME	REMARKS
		ACCESSORY PARTS	
1	XC4487021	ACCESSORY BAG	060100
2	XC2691023	BH PRESSER FOOT ASSY	060100
3	X54243051	SEAM RIPPER	
4	X58358021	Z NEEDLE ASSY	060100
5	X52800120	BOBBIN	060100
6	X59476021	CLEANING BRUSH	060100
7	XE6305101	OVERCASTING STITCH FOOT ASSY	1000017761
8	130012054	SPOOL PRESSER A	
9	XE2650001	BLIND STITCH FOOT ASSY	1000009241
10	X59370021	ZIPPER FOOT	060100
11	130013154	SPOOL PRESSER B	
12	XA5523020	NET	060100
13	XE0243001	SCREW DRIVER ASSY	060020
14	XC8349021	SCREW DRIVER	1000013436
15	X55468021	SCREW DRIVER S	1000013436
16	XZ5051001	PUNCH	1000016202
17	XD0810031	TRANSPARENCY PRESSER FOOT	060182
18	XE2643001	BUTTONING FOOT ASSY	1000006460
19	XC4654051	EXTRA SPOOL PIN ASSY	
20	XE1372001	SPOOL PRESSER C	060144
21	X57367021	BAG, 135 × 150	060100
22	X59296121	TWIN NEEDLE (1PC)	060100
23	XC4489051	ACCESSORY TRAY	
24	XC1807121	SCISSORS	
25	XA0188020	BAG 260 × 375HC	1000012991
26	XD0474151	EMBROIDERY PRESSER ASSEMBLY	1000008446
27	XC1074051	DISC-SHAPED SCREWDRIVER	1000011717
28	XA5912001	EMBROIDERYFOOP LL ASSY	
29	XD0661051	EMBROIDERY SHEET LL ASSY F	
30	XD0611051	MANUAL	
31	XC9183151	MANUAL	
32	XA6941052	KNEE LIFTER LEVER ASSY	
33	XE8786001	QUILTING FOOT (EU, CAN)	1000019679
34	X51804001	STITCH FOOT	
35	103561002	ZIPPER FOOT	
36	XA4783001	NO STICK FOOT H	
37	XE1105101	APPLIQUE FOOT ASSY	1000002053
38	XA3805021	1/4'QUILTING FOOT (EU, CAN)	060104
39	X59819021	QUILTER (EU, CAN)	060100
40	XE1679201	WALKING FOOT ASSEMBLY (EU, CAN)	1000000446
41	XC3198101	SIDE CUTTER ASSY (EU, CAN)	1000009333
42	XD0745051	USB I/F CORE CABLE	
43	XC8167551	INNER ROTARY HOOK ASSY	1000017150
44	XC6909050	PE BAG 90X100	

No.	CODE	NAME	REMARKS
45	XC8661251	BOBBIN GUIDE SET (U.S.A.)	1000009362
	XD0897151	BOBBIN GUIDE SET (CAN)	1000009362
		USER MANUAL / OTHER PARTS	
46	XD1534021	INSTRUCTION BOOK ENG (IRE, U.K., SIN, AUS, CAN, NEU, EEU)	060051
	XD1236021	INSTRUCTION BOOK GER (GER, EEU)	060051
	XD1574021	INSTRUCTION BOOK FRE (FRA, CAN)	060051
	XD1575021	INSTRUCTION BOOK DUT (FRA)	060051
	XD1576021	INSTRUCTION BOOK ITA (ITA)	060051
	XE0535001	INSTRUCTION BOOK ENG (U.S.A.)	ADD
	XE1367001	INSTRUCTION BOOK (CHINA)	ADD
	XE5789001	INSTRUCTION BOOK SPA	1000010470
47	~~LA1661001~~	~~WARRANTY CARD EURO CH (IRE, GER, U.K., FRA, ITA, NEU, AUT, EEU)~~	1000017863
	~~XC6402021~~	~~WARRANTY CARD UK (U.K.)~~	1000017863
	~~XE5609101~~	~~WARRANTY CARD 5YEARS ITA (ITA)~~	1000017863
	XC8945051	WARRANTY CARD T (U.S.A.)	ADD
	XD1328221	WARRANTY CARD CHINA (CHINA)	1000012599
	XE2010001	WARRANTY CARD BROTHER CANADA	1000001038
	~~LW313500~~	~~CEE WARRANTY CARD~~	1000016851
48	XD1237121	QUICK REFERENCE GUIDE	1000014577
49	XD1238051	LANGUAGE SETTING SHEET (IRE, GER, U.K., FRA, ITA, NEU)	
50	XD0256121	INSERTION WEEE (IRE, GER, U.K., FRA, ITA, NEU)	1000002031
51	130800021	BAG, 230 × 310H	1000011228
52	XE1343101	INSTRUCTION CD (NEU)	1000004662
53	XE3485001	INSERTION (NEU)	1000004662
	XE8541001	INSERTION (for INNER ROTARY HOOK & INNER ROTARY HOOK BRACKET: EXCEPT: USA, CAN)	1000018357
	XE8340001	INSERTION (for INNER ROTARY HOOK & INNER ROTARY HOOK BRACKET: USA, CAN)	1000018358
	~~XE5611001~~	~~REGISTRATION CARD ITA (ITA)~~	1000017863

(8) ACCESSORY PARTS / USER MANUAL / PACKAGE

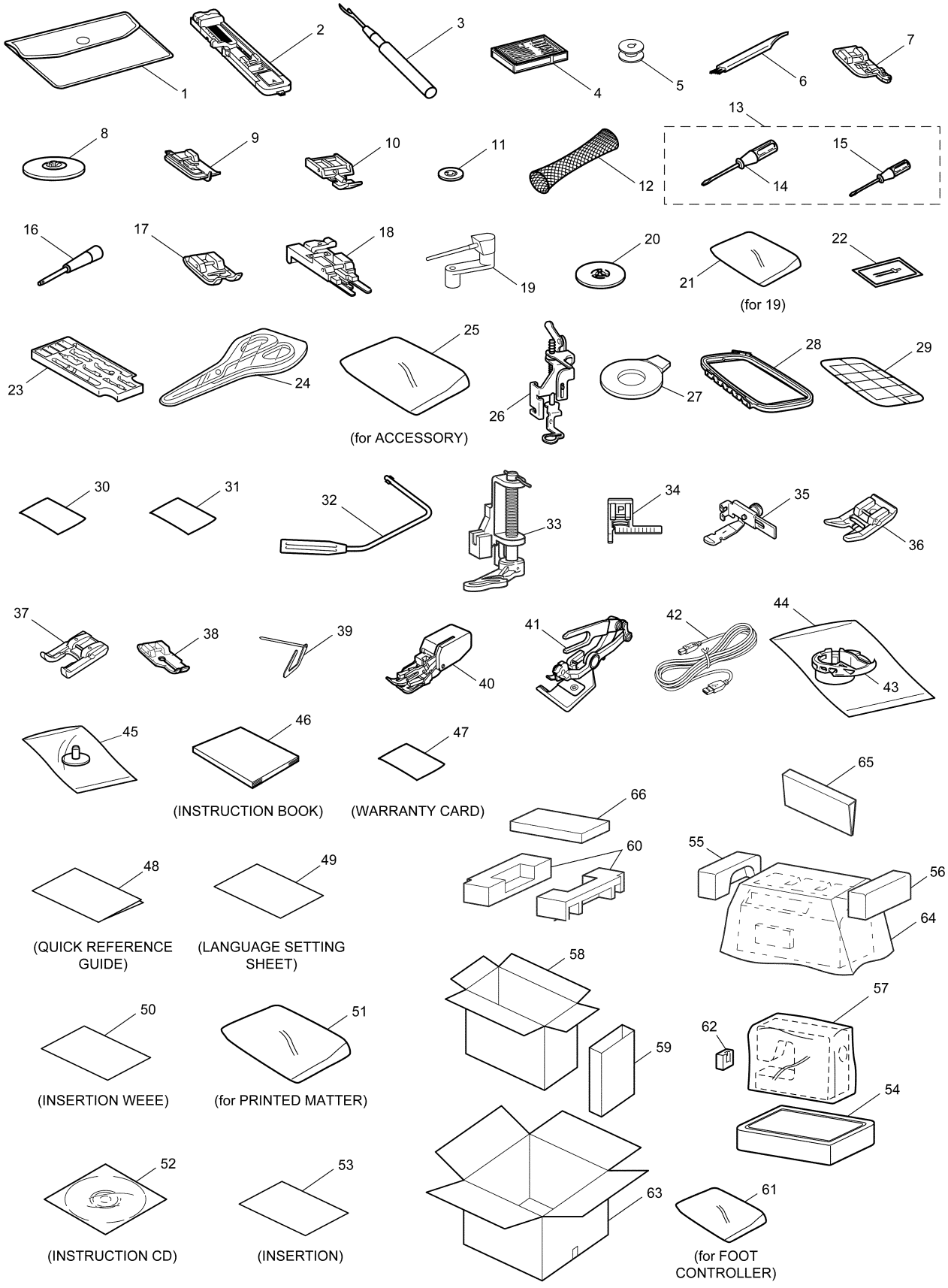

(8) ACCESSORY PARTS / USER MANUAL / PACKAGE

No.	CODE	NAME	REMARKS
		PACKAGE	
54	XC9754150	BODY SUPPORT SF	
55	XC2705150	CASE SUPPORT	
56	XC2706150	CASE SUPPORT SF-R	
57	X60439121	BAG 630 × 630T	1000013217
58	XE1800001	CARTON	060192
59	XD0702050	PAD U10	
60	XD1240050	POLYSTYRENE FOAM PAD U11	
61	XC4515020	BAG, BUBBLE PACK 250 × 250	060077
62	XC4762250	THREADER SUPPORT SF	
63	XE0570001	MASTER CARTON	060077
64	XE3838001	BAG 750X600H	1000005912
65	XC4631051	PAD	
66	XD1592050	EMBROIDERY FRAME LL CARTON	

NEEDLE-PRESSER MODULE

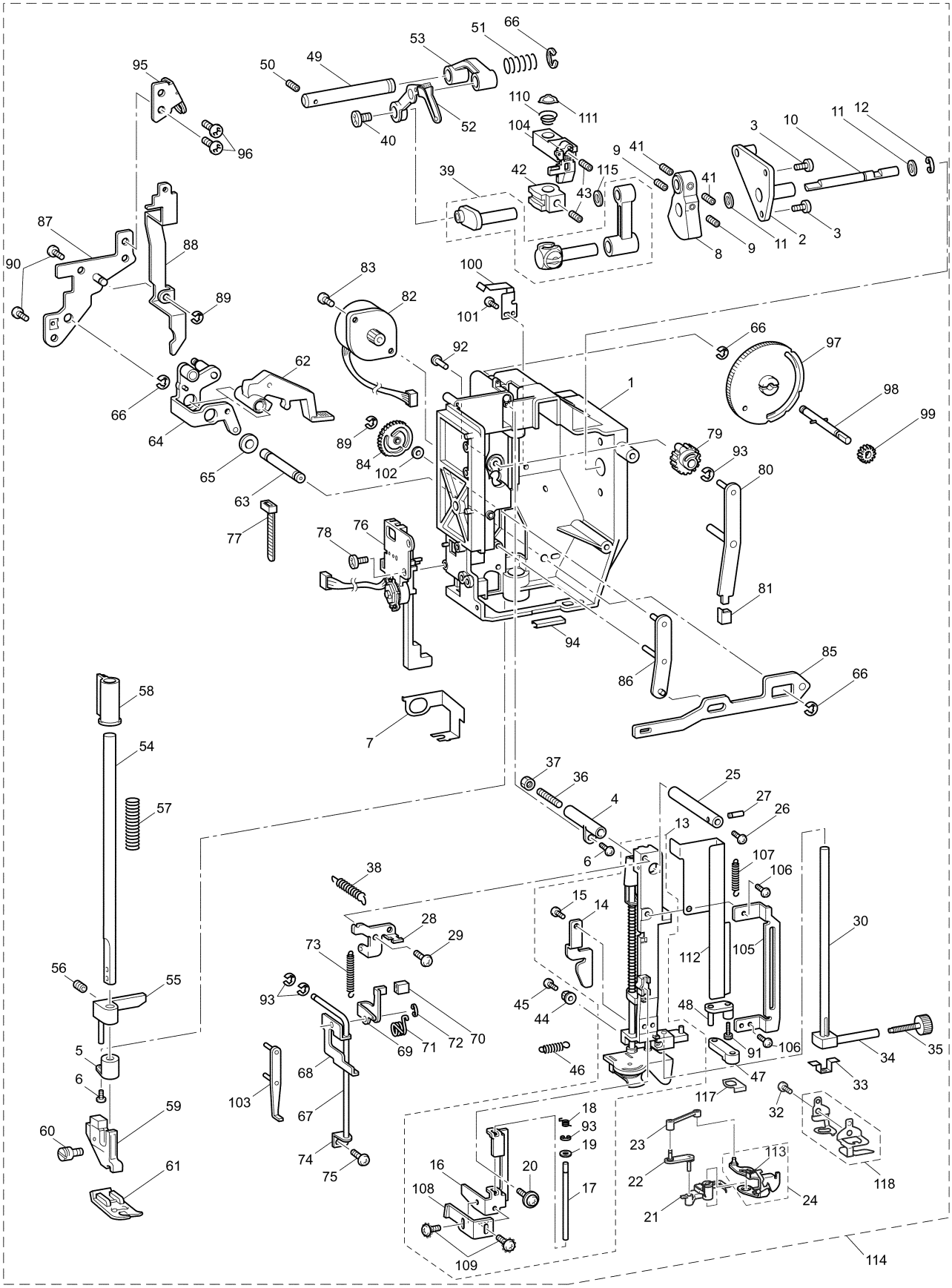

NEEDLE-PRESSER MODULE

No.	CODE	NAME	REMARKS
1	XE0017101	UPPER UNIT HOLDER	1000008073
2	XC2395221	SHAFT BUSHING ASSEMBLY	1000014050
3	XC7568051	SCREW, PAN (S/P WASHER) M4 × 14	
4	XC2398020	SHAFT BUSHING A	
5	XC2399021	PRESSER BAR BUSHING	
6	136681051	TAPTITE, BIND B M3 × 8	
7	XC5362050	PLATE SPRING	
8	XC2400021	THREAD TAKE-UP COUNTER WEIGHT	
9	012500532	SET SCREW, SOCKET (FT) M5 × 5	
10	XC2401021	UNIT SHAFT	
11	132434020	WASHER	
12	048060343	RETAINING RING, E6	1000001452
13	XD1230151	NEEDLE BAR SUPPORTER ASSY	
14	XC9908150	HOOK RELEASE PLATE	060032
15	060260516	SCREW, BIND M2.6 × 5	
16	XC3446051	RELEASE LEVER	
17	XC3447051	RELEASE LEVER SHAFT	
18	XC3448051	RELEASE LEVER SPRING	
19	137977050	POLYESTER SLIDER	
20	0A2300606	SCREW PAN (P WASHER) M3X6	
21	XD1550251	THREADER HOOK ASSY	1000017223
22	XD1546051	LINK A ASSY	
23	XD1548151	LINK B	1000009134
24	XC9613121	THREAD GUIDE ASSY	1000011660
25	XC2419021	SHAFT	
26	000020416	SCREW BIND M2X4	1000016096
27	XC2420050	SHAFT	
28	XD1488051	PLATE	
29	060300516	SCREW, BIND M3 × 5	
30	XC2423021	NEEDLE BAR	060152
~~31~~	~~XE0011101~~	~~NEEDLE BAR THREAD GUIDE Q~~	1000016793
32	X53053052	SCREW SM2.38	
33	XC2426020	NEEDLE THREAD PLATE	
34	XC2427051	NEEDLE BLOCK	
35	XZ0388251	NEEDLE CLAMP SCREW	1000010409
36	014401232	SET SCREW, SOCKET (FT) M4 × 12	
37	X56851051	LOCK NUT	
38	XC2429021	SPRING	
39	XE2590001	NEEDLE BAR CRANK ROD ASSY	1000001910
40	132051052	SCREW, FLAT SM3.57-40 × 7 L	
41	012500532	SET SCREW, SOCKET (FT) M5 × 5	
42	XC2434021	NEEDLE THREAD BLOCK	
43	012400432	SET SCREW, SOCKET (FT) M4 × 4	
44	XC2435020	ZIGZAG ADJUSTING NUT	

No.	CODE	NAME	REMARKS
45	018301032	BOLT, SOCKET M3 × 10	
46	XC2748021	SPRING-Z	
47	XC2436021	NEEDLE HOLDER BROCK	
48	XC2437021	SHAFT ASSY	
49	XC2440051	SHAFT	
50	014300532	SET SCREW, SOCKET (CP) M3 × 5	
51	XC2441021	SPRING	
52	XC6239151	THREAD TAKE-UP LEVER ASSY	
53	XC2443020	THREAD TAKE-UP LEVER LINK	
54	XC2444021	PRESSER BAR	
55	XC2445021	PRESSER BAR CLAMP ASSY	
56	014501032	SET SCREW, SOCKET (CP) M5 × 10	
57	XC4457051	SPRING	
58	XC4458050	PRESSER SPRING SUPPORTER	
59	XC3015031	PRESSER FEED HOLDER ASSY	060160
60	132730122	TIGHTENING SCREW 3.57	1000003761
61	XC3021031	Z FOOT	060160
62	XC9725051	PRESSER FOOT LIFTER	
63	XC4459051	PRESSER LIFT SHAFT	
64	XC4460051	LIFTER ASSY	
65	XA1860150	WASHER	
66	048040343	RETAINING RING, E4	1000001452
67	XC2453051	LEVER GUIDE SHAFT	
68	XC2455021	LEVER A ASSY	
69	XC2458021	LEVER B	
70	XC2459020	CAP	
71	XC2460021	TORSION SPRING	
72	048030343	RETAINING RING, E3	1000001452
73	XC2461021	SPRING	
74	XC2462021	LEVER PRESSER PLATE	
75	138433051	TAPTITE, PAN B M3 × 6	
76	XC2463121	BH SWITCH ASSY	
77	X53169020	BAND	060143
78	XZ0149051	TAPTITE, PAN B 4 × 12	
79	XC2474020	Z ZIGZAG CAM	
80	XC2476021	Z ZIGZAG LEVER ASSY	
81	XC2480020	Z LEVER CUP	
82	XC2481051	MOTOR, PULSE: Z SMJ35-4840-A	
83	X59629051	TAPTITE, BIND B M3X10	
84	XC2483020	T CAM	
85	XC2491121	THREAD RELEASER ASSY	1000013556
86	XC2494021	THREAD RELEASE LEVER ASSY	
87	XC4465051	ADJUSTING PLATE ASSY	
88	XC2501121	TENSION RELEASER C	

NEEDLE-PRESSER MODULE

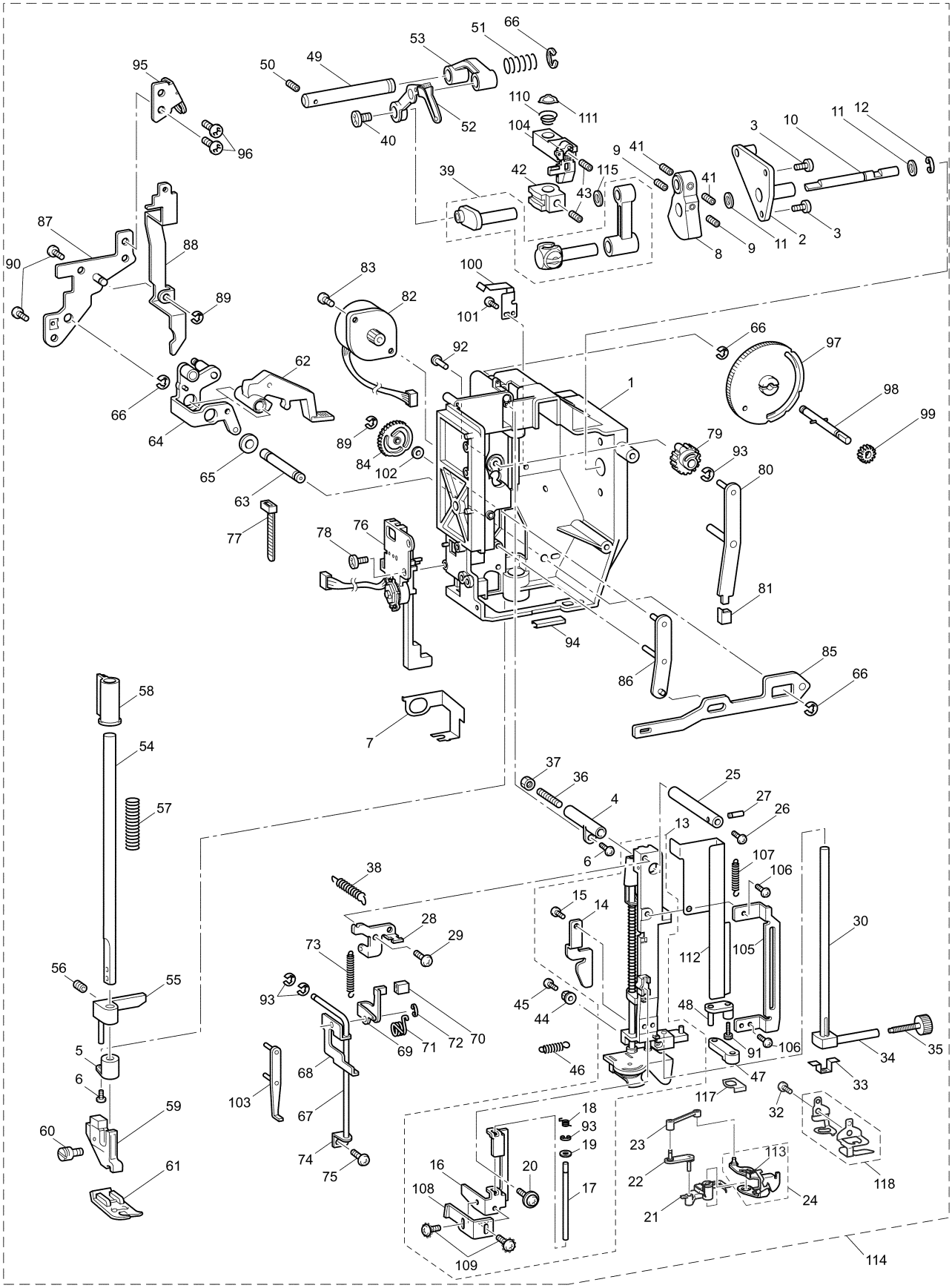

NEEDLE-PRESSER MODULE

No.	CODE	NAME	REMARKS
89	048030343	RETAINING RING, E3	1000001452
90	XC3588051	GIZA TITE 4X12	
91	XC3037051	SCREW3 × 10	
92	XC2475051	SHAFT	
93	048020343	RETAINING RING, E2	1000001452
94	XC3034020	THREAD GUIDE PLATE	
95	XC4467051	WIRE GUIDE PLATE U	
96	060400616	SCREW BIND M4X6	
97	XC4468051	PRESSER DIAL	
98	XC4522051	PRESSER DIAL SHAFT ASSY	
99	XC4471050	PRESSER DIAL GEAR	
100	XC4472051	PLATE SPRING	
101	136681051	TAPTITE, BIND B M3 × 8	
102	XZ0155051	POLYESTER SLIDER	
103	XC6241251	RELEASE PLATE ASSY	1000006838
104	XC6245151	NEEDLE BAR HOOK STAND ASSY	1000008635
105	XC6251051	RELEASE GUIDE PLATE	
106	060300616	SCREW BIND M3X6	
107	XD1489051	SPRING	
108	XC6253150	RELEASE ADJUSTER	1000011626
109	0A6300606	SCREW PAN (T WASHER) M3X6	
110	XC6254051	NEEDLE BAR PRESSER SPRING	
111	XC6255050	WASHER, THRUST	
112	XD0604050	SPRING GUARD	
113	XC9616051	SPRING	ADD
114	XD0971451	NEEDLE SUPPLY UNIT ASSY U11 (EU)	1000013556
	XD0971452	NEEDLE SUPPLY UNIT ASSY U11 (U.S.A., CAN)	1000013556
115	X53330020	WASHER	1000003843
~~116~~	~~XE0012101~~	~~NEEDLE THREAD GUIDE SPRING~~	1000016793
117	XD1916050	UPPER UNIT SUPPORT PLATE	1000008073
118	XE7727001	N/B THREAD GUIDE SUPPLY ASSY	1000016793

FEED MODULE

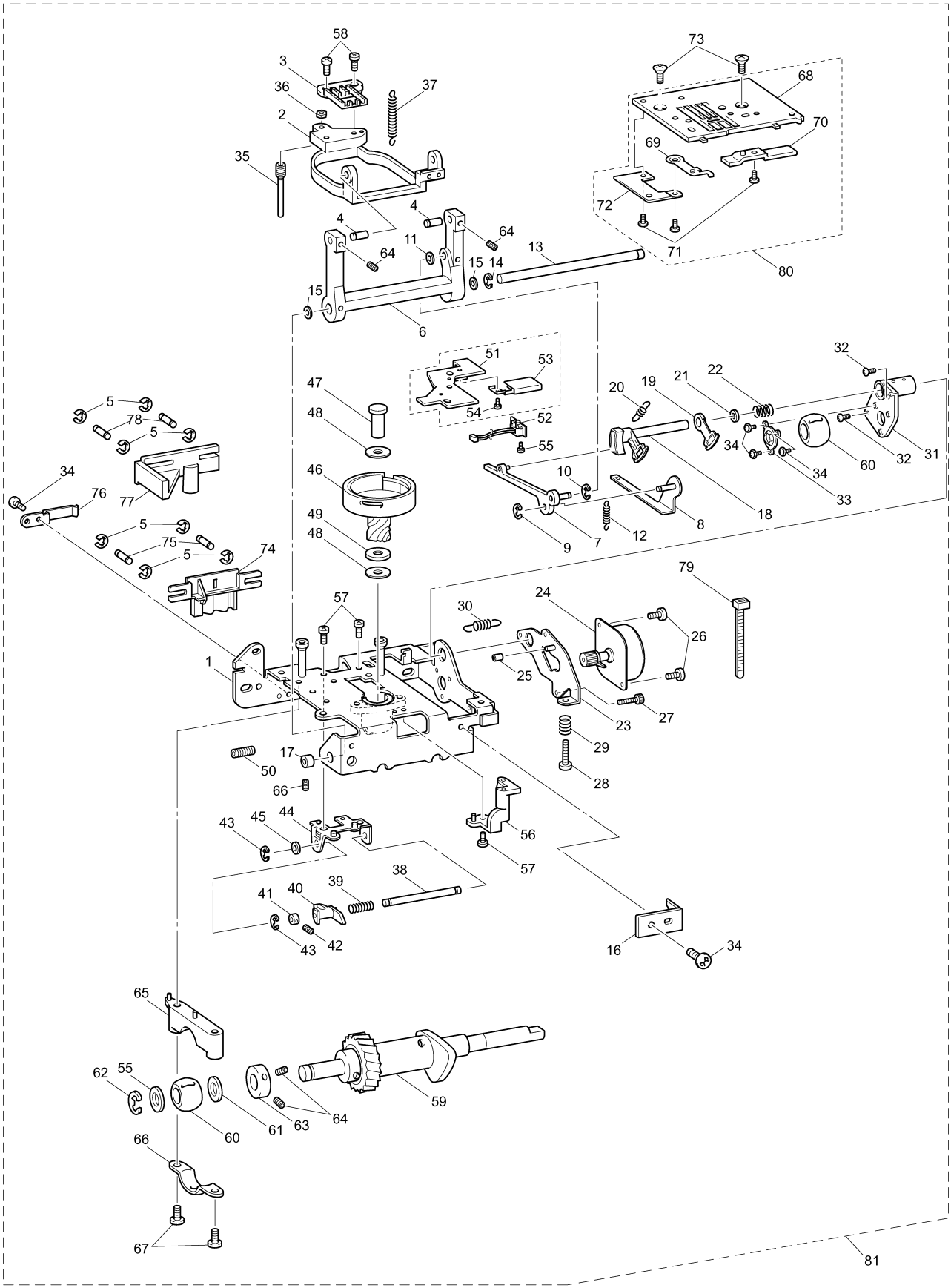

58
3
36
37
2
35
73
68
70
69
72
71
80
4
4
64
64
11
13
15
14
15
6
51
53
47
48
54
52
55
20
19
21
22
32
34
34
60
32
31
33
18
10
9
7
12
8
5
78
5
77
34
76
46
49
48
5
75
5
74
79
57
30
24
26
1
25
23
27
29
28
17
50
66
43
45
44
56
57
38
39
41
40
43
42
16
34
65
62
55
60
61
63
64
59
66
67
81

FEED MODULE

No.	CODE	NAME	REMARKS
1	XC7638121	BASE PLATE	060148
2	XC2510021	FEED BAR	
3	XE4919001	FEED DOG	1000007979
4	XC2512021	FEED BAR SHAFT A	060148
5	048020343	RETAINING RING, E2	1000001452
6	XC8337021	FEED ARM A	
7	XC2517021	FEED ARM B ASSY	
8	XC2521021	FEED SUPPORTING PLATE ASSY	
9	048020343	RETAINING RING, E2	1000001452
10	048030343	RETAINING RING, E3	1000001452
11	137999020	POLYESTER SLIDER	060148
12	XZ0174021	SPRING	
13	XC7835051	HORIZONTAL FEED SHAFT	
14	048050343	RETAINING RING, E5	1000001452
15	X50546020	WASHER, THRUST	060148
16	XC8195051	SHAFT STOPPER PLATE	
17	130676121	SET SCREW COLLAR	060148
18	XC2527121	FEED ADJUSTER	1000000154
19	XC2529020	F GEAR	
20	XC2530021	SPRING	
21	137713020	POLYESTER SLIDER	060143
22	XC2531021	SPRING	
23	XC2532021	FPM HOLDER ASSY	
24	XC2534021	MOTOR, PULSE: F SMJ35-4840-C	
25	XC2587020	RUBBER	060143
26	060300516	SCREW, BIND M3 × 5	
27	XC3338021	SCREW3 × 8	060148
28	018402533	BOLT, SOCKET M4 × 25	1000002623
29	XC2537021	SPRING	
30	XC2538021	SPRING	
31	XC2539021	BUSHING SUPPORTER ASSY	
32	060400616	SCREW, BIND M4 × 6	
33	XC2542021	BUSHING PRESSER B	
34	060300516	SCREW, BIND M3 × 5	
35	XC3941021	VERTICAL ADJUSTER SCREW ASSY	060148
36	XC2546021	M5 NUT	060148
37	XC2547021	SPRING	
38	XC8361051	VERTICAL FEED SHAFT	
39	XC2550021	SPRING	
40	XC2551020	VERTICAL LEVER	
41	XC2552051	SET SCREW COLLAR	
42	014400432	SET SCREW, SOCKET (CP) M4 × 4	
43	048030343	RETAINING RING, E3	1000001452
44	XC7801021	VERTICAL SUPPORTING PLATE	

No.	CODE	NAME	REMARKS
45	137713020	POLYESTER SLIDER	060143
46	XC2210021	OUTER ROTALY HOOK ASSY	060148
47	XD1943021	OUTER ROTARY HOOK SHAFT	060148
48	137805022	SPACER	060148
49	137976021	WASHER 6	060148
50	014400632	SET SCREW, SOCKET (CP) M4 × 6	
51	XC8406351	INNER ROTARY HOOK BRACKET ASSY	1000017150
52	XC8350051	PHOTO DIODE HOLDER ASSY	
53	XC7866351	CORD HOLDER	1000012334
54	060260316	SCREW BIND M2.6X3	
55	000020416	SCREW BIND M2X4	1000016096
56	XC2559221	STOPPER PLATE BLOCK ASSY	1000015861
57	060400516	SCREW, BIND M4 × 5	
58	060300816	SCREW, BIND M3 × 8	
59	XC2562121	LOWER SHAFT B ASSY	
60	X52664020	LOWER SHAFT BUSHING	060148
61	X52383020	WASHER, THRUST	060148
62	048060343	RETAINING RING, E6	1000001452
63	137768121	SET SCREW COLLAR	060148
64	014400432	SET SCREW, SOCKET (CP) M4 × 4	
65	XC2566021	BUSHING SUPPORTER A	
66	XC2567021	BUSHING PRESSER A	
67	060401616	SCREW, BIND M4 × 16	
68	XC7872151	NEEDLE PLATE A	
69	XC9728051	STOPPER PLATE	
70	XC2571121	F GEAR STOPPER PLATE	1000018284
71	060260316	SCREW, BIND M2.6 × 3	
72	XE1488001	NEEDLE PLATE B SUPPORT PLATE	060162
73	X50487021	SCREW M4	1000010447
74	XC2572021	DROP KNOB	
75	XC2573051	SLIDE SHAFT B	
76	XC2574021	SPRING PLATE	
77	XD0372051	DROP LEVER FE	
78	XC3587021	SLIDE SHAFT A	
79	X53169020	BAND	060148
80	XC9727151	NEEDLE PLATE A ASSY	1000018284
81	XD0972251	FEED SUPPLY UNIT ASSY U11 (EU)	1000018284
	XD0972252	FEED SUPPLY UNIT ASSY U11 (U.S.A., CAN)	1000018284

THREAD CUTTER MODULE

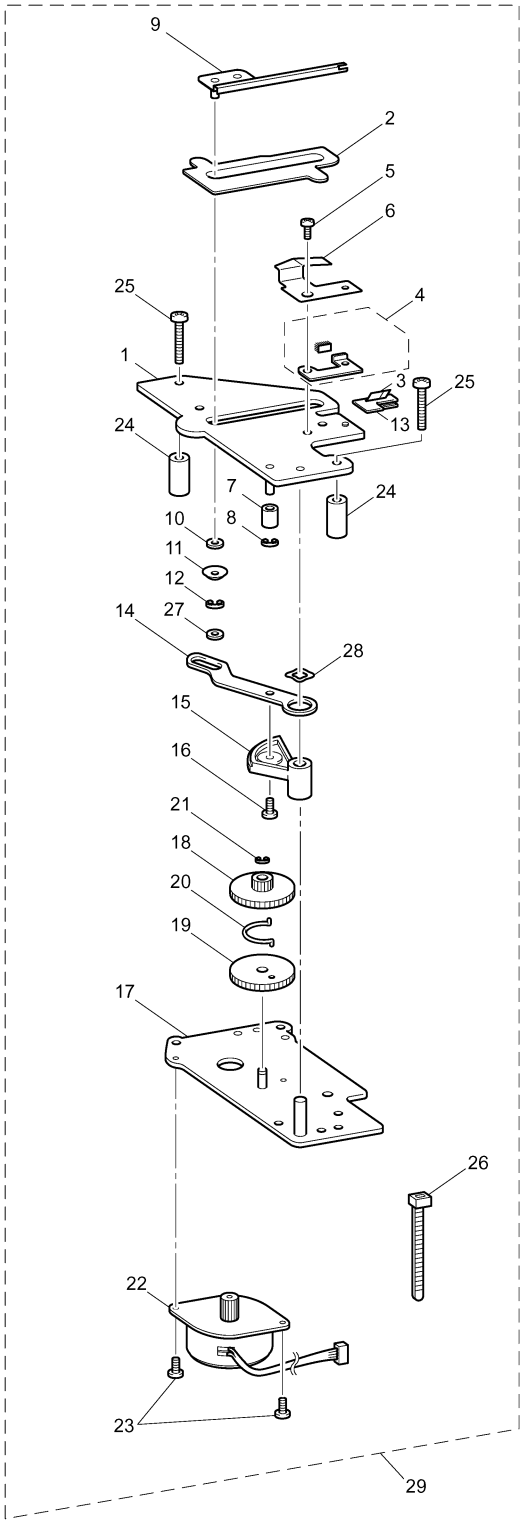

THREAD CUTTER MODULE

No.	CODE	NAME	REMARKS
1	XC9733051	THREAD CUTTER FRAME ASSY	
2	XC9735050	SPACER	
3	X80321021	NT LOWER THREAD CUTTER	060143
4	XE4994001	PRESSER PLATE ASSY	1000008247
5	060300516	SCREW, BIND M3 × 5	1000010059
6	XC2598120	SPRING PLATE	
7	XC2587020	RUBBER	060143
8	048030343	RETAINING RING, E3	1000001452
9	XC2583121	THREAD HOOK ASSY	
10	137713020	POLYESTER SLIDER	060143
11	X56731020	WASHER	060143
12	048040343	RETAINING RING, E4	1000001452
13	XC9736050	CUTTER HOLDER	
14	XC2581221	THREAD CUTTER LEVER	060151
15	XC2582020	THREAD CUTTER LEVER GEAR	
16	0A4300605	SCREW, PAN (S/P WASHER) M3 × 6	
17	XC2588321	MOTOR HOLDER ASSY	1000018482
18	XC2592020	IDLE GEAR A	
19	XC2593020	IDLE GEAR B	
20	X56323021	SPRING	
21	048020343	RETAINING RING, E2	1000001452
22	XC2331121	MOTOR PULSE: C SMJ35-4840-B	
23	060300416	SCREW, BIND M3 × 4	
24	XC2594121	COLLAR	1000010397
25	060402016	SCREW, BIND M4 × 20	
26	X53169020	BAND	060143
27	137713020	POLYESTER SLIDER	060143
28	XC8407020	WAVE-SHAPE SPRING WASHER	060143
29	XD0075351	THREAD CUTTER SUPPLY ASSY (EU)	1000018482
	XD0075352	THREAD CUTTER SUPPLY ASSY (U.S.A., CAN)	1000018482

brother®

NV1200
05A06HF882U11

01. 2006.
06. 2010.